Headlight

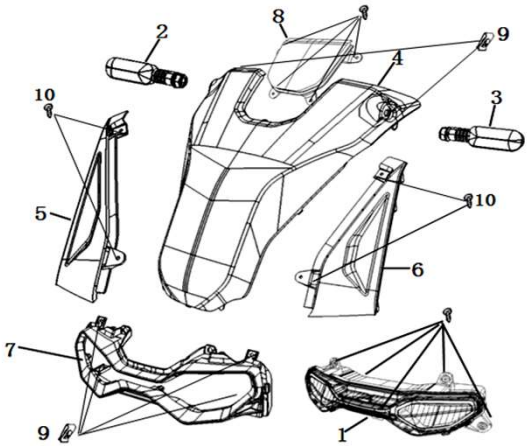

No.	Item No.	Name-EN	Qty	Remark
1	33100-TBG-C00	Light Assy,Head	1	
2	33400-TBG-A00	Winker,R Front	1	
3	33450-TBG-A00	Winker,L Front	1	
4	64300-TBG-C00-S-MB02N-ST008	Front Cover, MB02N-ST008/Black&Red Sticker	1	
	64300-TBG-C00-S-MB02N-ST015	Front Cover), MB02N-ST015/Black&Yellow Sticker	1	
	64300-TBG-C00-S-MB03P	Front Cover, MB03P/Black	1	
5	64301-TBG-C00	Garnish R,Fr Cover	1	
6	64302-TBG-C00	Garnish L,Fr Cover	1	
7	64305-TBG-C00-S-MG07M	Headlight Cover, MG07M/Grey	1	
8	64303-TBG-C00	Garnish Upper,Fr Cover	1	
9	90303-GCC-000	Spring Clamp M4	6	
10	93903-QSM-A00	Tapping Screw 4X12	13	
11	93500-QSM-C00	Cross Recessed Pan Head Screw 5X12	2	

Speedometer

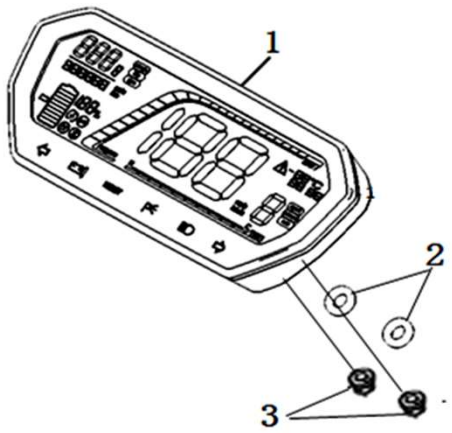

No.	Item No.	Name-EN	Qty	Remark
1	37200-TBG-A00	Speedometer Assy	1	
2	37300-QSM-A00	Rubber Gasket	2	
2	94050-06080	Flange Nut 6	2	

Switch Assy.

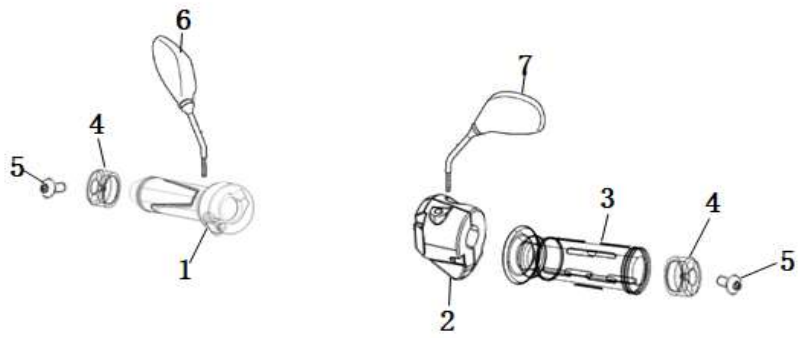

No.	Item No.	Name-EN	Qty	Remark
1	35200-QSM-A70	Switch Assy., Right	1	
2	35150-TBG-A00	Switch Assy., Left	1	
3	30400-TAC-EC0	Grip L,Handle	1	
4	53105-TAC-EC0	Weight,Handle	2	
5	96700-06016-07	Hexagon socket bolt 6x16(Trivalent black)	2	
6	88110-QSM-A50	Mirror Assy,R Back	1	
7	88120-QSM-A50	Mirror Assy,L Back	1	

Front Windshield

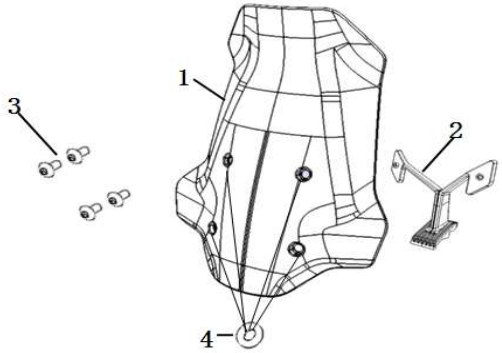

No.	Item No.	Name-EN	Qty	Remark
1	64100-TBG-C00	Front Windshield	1	
2	64111-TBG-C00	Bracket, Front Windshield	1	
3	95101-QSM-A00	Socket Screw Special M6	4	
4	83542-TBG-C00	Glue, Front windshield	4	

Handlebar

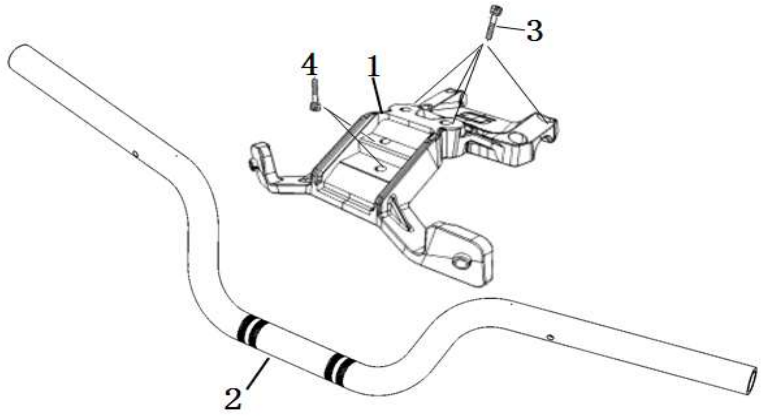

No.	Item No.	Name-EN	Qty	Remark
1	53131-TBG-C00	Holder,Handlebar	1	
2	53100-TBG-A00	Pipe,Handlebar	1	
3	96700-06016-07	Hexagon Socket Bolt 6X16（black）	4	
4	96700-06016-08	Hexagon Socket Bolt 6X16（color-zinc）	2	

Stand Pipe

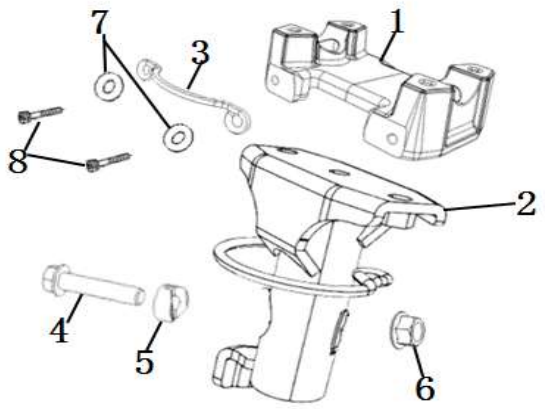

No.	Item No.	Name-EN	Qty	Remark
1	53230-TBG-A00	Bridge,Top	1	
2	53110-TBG-A00	Post Comp,Handle	1	
3	53133-TBG-C00	Clip,Top Bridge	1	
4	95801-TAC-A00	Flange Bolt 10X45	1	
5	53124-TGF-A00	Latch Segment,Handlebar	1	
6	90306-TAC-A00	Flange Lock Nut 10X1.25	1	
7	94100-TBG-C00	Washer 6mm	2	
8	96700-06016-07	Hexagon socket bolt 6x16（Trivalent black）	2	
9	96708-TGC-A000	Hexagon socket bolt 8x20（Trivalent black）	2	

Front Wheel

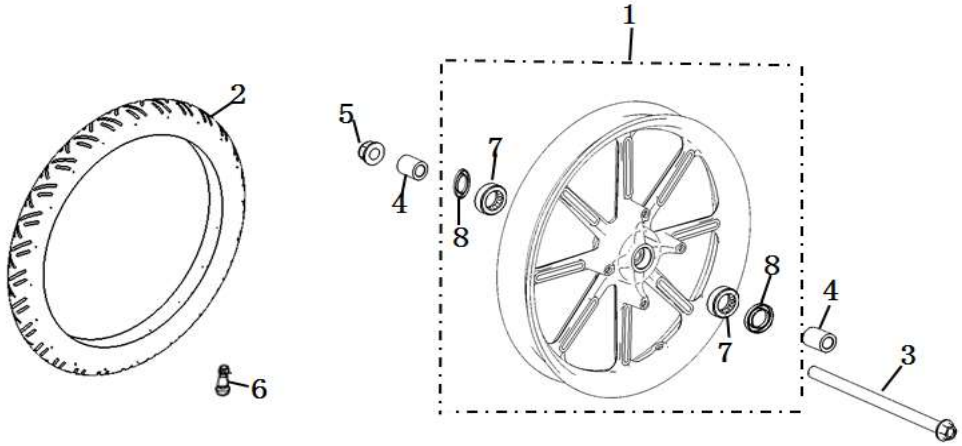

No.	Item No.	Name-EN	Qty	Remark
1	44800-TBG-A00	Wheel Assy.,Fr	1	
2	44701-TBG-A00	Tire(100/80-16)	1	
3	44301-QSM-A00	Axle,Fr Wheel	1	
4	44311-QSM-A00	Collar,Fr Wheel Side	2	
5	90307-QSM-A00	Nut,Special Flange M12	1	
6	42702-QSM-A00	Valve,Rim	1	
8	90755-QSM-A00	OIL SEAL(ϕ20xϕ32x5)	2	

Front Suspension

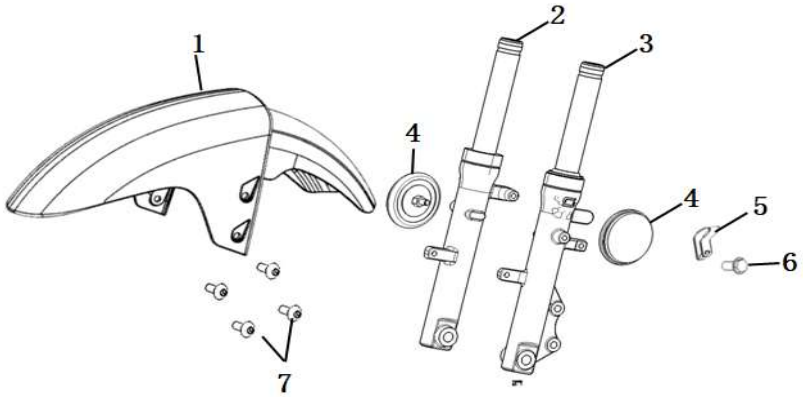

No.	Item No.	Name-EN	Qty	Remark
1	61100-TBG-C00-S-MB02N-ST008	Front Fender, MB02N-ST008/Black&Red Sticker	1	
	61100-TBG-C00-S-MB02N-ST015	Front Fender, MB02N-ST015/Black Sticker	1	
	61100-TBG-C00-S-MB03P	Front Fender, MB03P/Gloss Black	1	
2	51400-TBG-C00	Fork Assy,R Fr	1	
3	51500-TBG-C00	Fork Assy,L Fr	1	
4	33742-TAC-A01	Reflector,Side	2	
5	53205-TBG-A00	Clamper,Brake Hose	1	
6	95701-06012-07	Bolt,Flange 6X12	1	
7	95101-QSM-A00	Socket Screw Special M6	4	

CBS

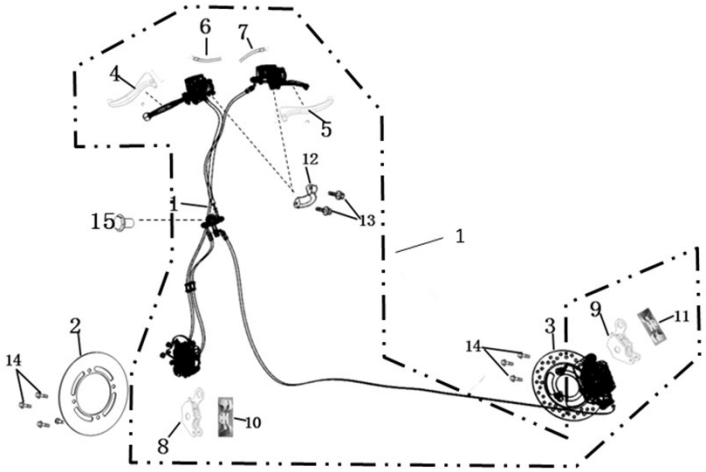

No.	Item No.	Name-EN	Qty	Remark
1	46000-TBG-A00	Cbs Assy.	1	
2	45251-QSM-F01	Disk,Fr Brake	1	
3	41300-TAC-A01	Disk,Rr Brake	1	
4	53176-QSM-D00	Rear brake lever	1	
5	53175-QSM-D00	Front brake lever	1	
6	35345-QSM-A00	Rear brake light switch	1	
7	35340-QSM-A00	Front brake light switch	1	
8	45310-TBG-A00	Front brake pad(set)	1	
9	43310-TBG-A00	Rear brake pad (set)	1	
10	45108-QSM-C00	Front brake return spring	1	
11	43108-TBG-A00	Rear brake return spring	1	
12	45517-QSM-A00	Holder,Main cylinder	2	
13	90102-QSM-A00	Bolt,Flange 6X22	4	
14	90105-QSM-A00	Brake Disk Install Bolt 8X25	7	
15	95701-06030-18	Flange Bolt 6X30	1	

Side Stand

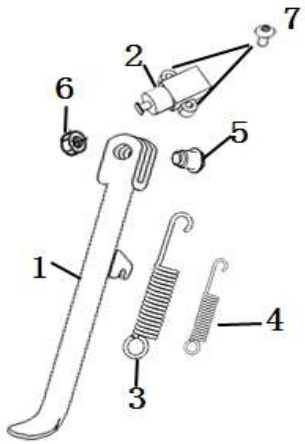

No.	Item No.	Name-EN	Qty	Remark
1	50535-TBG-A00	Stand Comp,L Side	1	
2	35160-TBG-A00	Sw.Set,Side Stand	1	
3	95014-72102	Spring,Side Stand	1	
4	95014-72112	Sub Spring,Side Stand	1	
5	90110-QSM-F00	Pivot,Side Stand	1	
6	94031-10080	Nut Hex 10Mm	1	
7	93500-06016-0G	Phillips screw 6X16	2	

Main Stand

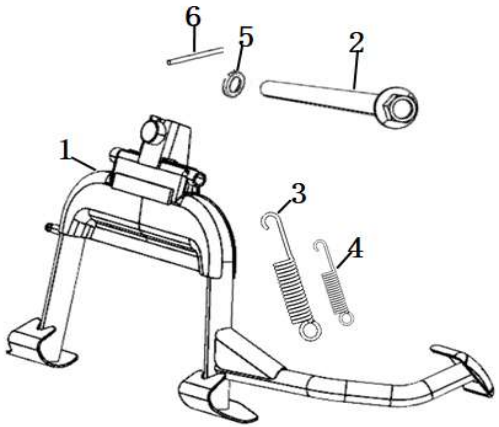

No.	Item No.	Name-EN	Qty	Remark
1	50540-TBG-A00	Stand Comp,Main	1	
2	50550-TBG-A00	Pivot,Main Stand	1	
3	95014-TAC-A00	Spring,Main Stand	1	
4	95015-TAC-EC0	Sub Spring,Main Stand	1	
5	94102-10800	Washer 10	1	
6	94201-30250	Split 3X25	1	
7	77206-TAC-A00	Cylindrical Rubber	1	

Main Frame

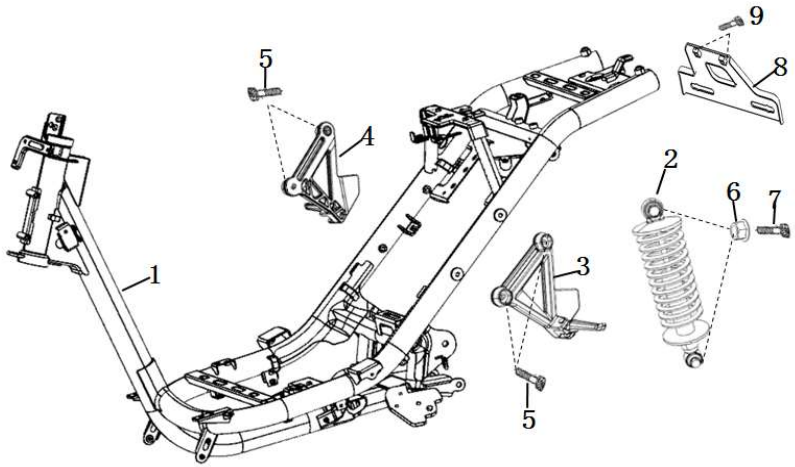

No.	Item No.	Name-EN	Qty	Remark
1	50100-TBG-A00	Frame Body Comp	1	
2	52400-TBG-C00	Cushion Assy,Rr	1	
3	50750-TBG-C00	Assy,L Pillion Step	1	
4	50650-TBG-C00	Assy,R Pillion Step	1	
5	95701-08025-08	BOLT,FLANGE 8x25	4	
6	95801-10040-07	BOLT,FLANGE 10X40	1	
7	94050-10070	NUT,FLANGE M10	2	
8	50420-TBG-A00	Bracket,License Plate	1	
9	95701-06012-08	BOLT,FLANGE 6x12	2	

Front Bracket

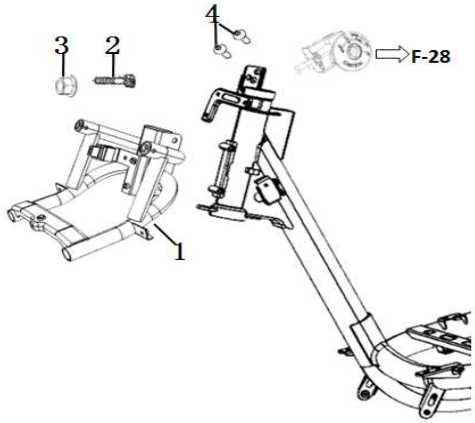

No.	Item No.	Name-EN	Qty	Remark
1	50310-TBG-C00	Bracket,Fr	1	
2	95801-TBG-A00	Bolt,Flange 8X50	2	
3	94050-08080	Flange Nut M8	2	
4	93606-TAC-A00	Cross Recessed Countersunk Head Screw 6X12	2	

Sub-Cushion

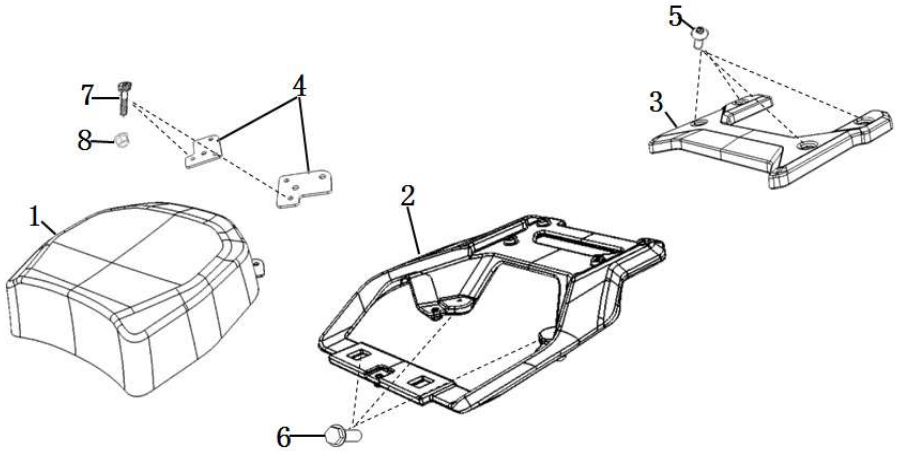

No.	Item No.	Name-EN	Qty	Remark
1	77300-TBG-C00	Sub-Cushion Assy.	1	
2	50400-TBG-C00	Carrier,Rr	1	
3	50406-TBG-C00	Cover,Rr Carrier	1	
4	77301-TBG-C00	Stay,Sub Seat	1	
5	95101-TBG-A00	Hexagon Socket Head Step Screw M6	4	
6	95701-08025-08	Flange Bolt 8X25	3	
7	95701-06012-07	Flange Bolt 6X12	2	
8	94050-06080	Flange Nut M6	4	

Steering Stem

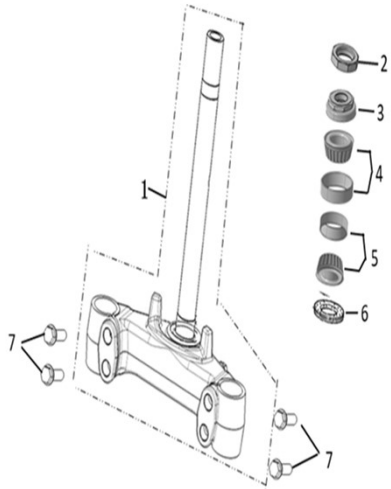

No.	Item No.	Name-EN	Qty	Remark
1	53200-TBG-A00-K	Stem Assy,Strg	1	
2	50306-TBG-A00	Nut,Steering Stem Lock	1	
3	53220-TBG-A00	Thread Assy,Steering Head Top	1	
4	53216-TBG-A00-M1	Bearing(Hr32005Xj)	1	
5	53217-TBG-A00-M1	Bearing(Hr32006Xj)	1	
6	53214-TBG-A00	Dust Ring	1	
7	95801-TAC-A10	Bolt,Flange 10X45	4	

Front Cover

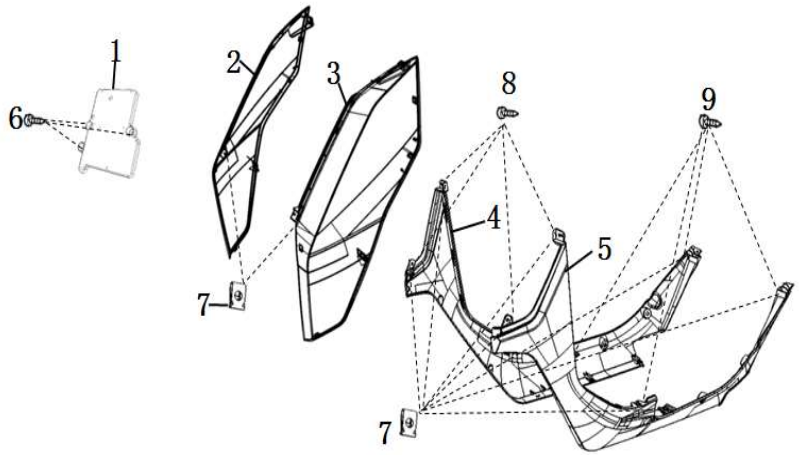

No.	Item No.	Name-EN	Qty	Remark
1	50502-TBG-A00	Plate,Elec.	1	
2	64350-TBG-C00-S-MB01N	Front Right Side Cover, MB01N/Black	1	
	64350-TBG-C00-S-MS08M	Front Right Side Cover, MS08M/Silver	1	
	64350-TBG-C00-S-MG06N	Front Right Side Cover, MG06N/Grey	1	
3	64355-TBG-C00-S-MB01N	Front Left Side Cover, MB01N/Black	1	
	64355-TBG-C00-S-MS08M	Front Left Side Cover, MS08M/Silver	1	
	64355-TBG-C00-S-MG06N	Front Left Side Cover, MG06N/Grey	1	
4	83520-TBG-A00	Side Cover,R	1	
5	83620-TBG-A00	Side Cover,L	1	
6	95701-06012-08	Bolt,Flange 6X12	3	
7	90303-GCC-000	Spring Clip M4	10	
8	93903-QSM-A00	TAPPING SCREW 4X12	6	
9	93500-QSM-C00	Cross recessed pan head screw 5X12	4	

Main Girder Cover

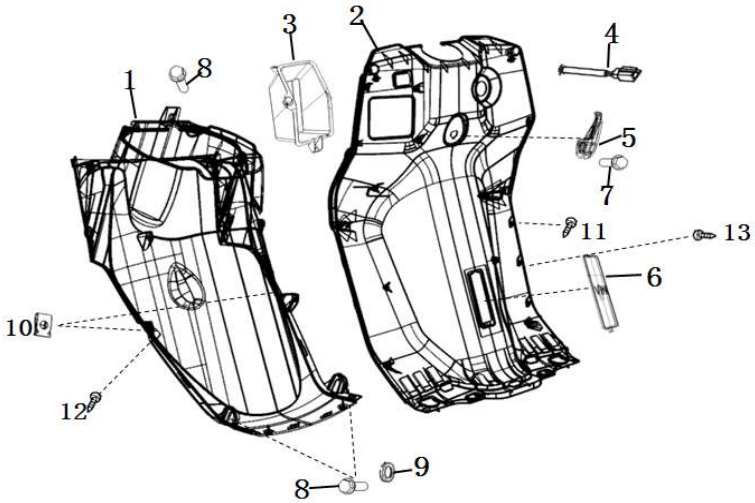

No.	Item No.	Name-EN	Qty	Remark
1	61110-TBG-A00	Cover,Fr Lower	1	
2	81141-TBG-A00	Cover,Main Pipe	1	
3	64460-TBG-A00	Pocket,Inner	1	
4	35400-TAC-A00	Usb Port	1	
5	81132-TBG-A00	Hook,Luggage	1	
6	81133-TBG-A00	Cover,Vin	1	
7	90111-QSM-A10	FLANGE STEP BOLT M6	1	
8	95701-06012-08	BOLT,FLANGE 6x12	3	
9	94100-TBG-A00	WASHER 6mm	2	
10	90303-GCC-000	SPRING CLIP M4	2	
11	93903-QSM-A10	TAPPING SCREW 4X12	14	
12	93903-QSM-A00	TAPPING SCREW 4X12	5	
13	93903-24480	TAPPING SCREW 4X16	2	

Footboard

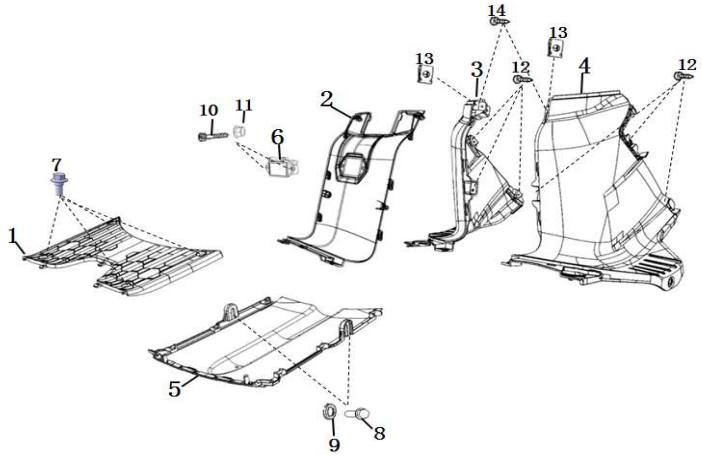

No.	Item No.	Name-EN	Qty	Remark
1	64310-TBG-A00	Step,Floor	1	
2	83750-TBG-A00	Cover,Center	1	
3	83760-TBG-A00	Cover,R Center	1	
4	83765-TBG-A00	Cover,L Center	1	
5	35310-TBG-A00	Socket,Frame Charger	1	
6	50621-TBG-A00	Cover,Under	1	
7	90111-QSM-A10	Flange step bolt M6	4	
8	95701-06012-08	Flange Bolt 6X12	2	
9	94100-TBG-A00	Washer 6mm	2	
10	93500-04012-1G	Phillips screw 4X12	2	
11	94001-TBG-A00	Hex nuts M4	2	
12	93903-QSM-A00	TAPPING SCREW 4X12	6	
13	90303-GCC-000	SPRING CLIP M4	2	
14	93500-QSM-C00	Cross recessed pan head screw 5X12	2	

Rear Side Cover

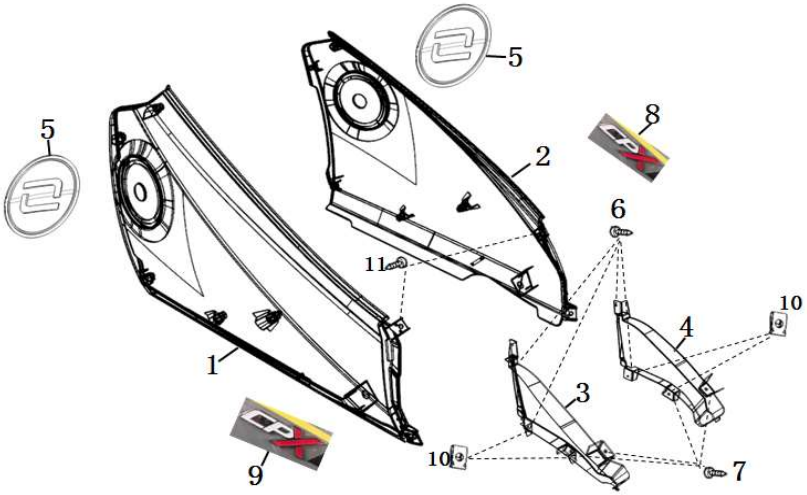

No.	Item No.	Name-EN	Qty	Remark
1	83600-TBG-C00-S-MB01N	Rear Left Side Cover, MB01N/Black	1	
	83600-TBG-C00-S-MS08M	Rear Left Side Cover, MS08M/Silver	1	
	83600-TBG-C00-S-MG06N	Rear Left Side Cover, MG06N/Grey	1	
2	83500-TBG-C00-S-MB01N	Rear Right Side Cover, MB01N/Black	1	
	83500-TBG-C00-S-MS08M	Rear Right Side Cover, MS08M/Silver	1	
	83500-TBG-C00-S-MG06N	Rear Right Side Cover, MG06N/Grey	1	
3	83605-TBG-A00	Cowl,L Guide	1	
4	83505-TBG-A00	Cowl,R Guide	1	
5	83516-QSM-A00	Logo	2	
6	93903-24480	Tapping screws 4x16	4	
7	93903-QSM-A00	Tapping screws 4x12	8	
8	83502-TBG-C00	CPX stereogram,right	1	
9	83602-TBG-C00	CPX stereogram,left	1	
10	90303-GCC-000	SPRING CLIP M4	4	
11	93500-QSM-C00	Cross recessed pan head screw 5X12	2	

Cushion

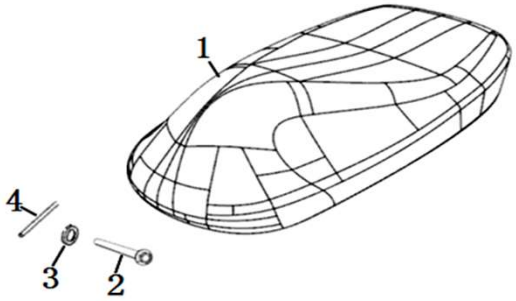

No.	Item No.	Name-EN	Qty	Remark
1	77200-TBG-C00	Seat Comp Double	1	
2	77211-TAC-A00	Pivot,Seat	1	
3	94102-08800	Washer 8mm	1	
4	94201-16180	Split Pin 1.6X18	1	

Storage Box

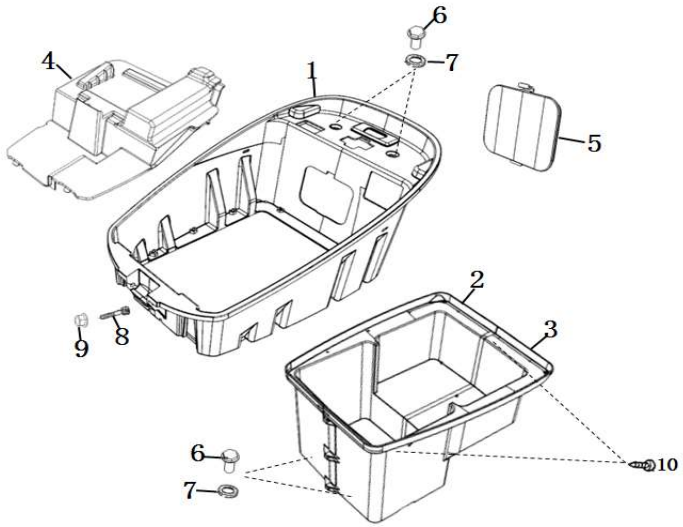

No.	Item No.	Name-EN	Qty	Remark
1	81250-TBG-A00	Box,Luggage	1	
2	81255-TBG-A00	R Down,Luggage Box	1	
3	81256-TBG-A00	L Down,Luggage Box	1	
4	80101-TBG-A00	Cover,Batt.	1	
5	81252-TBG-A00	Cover,Maint.	1	
6	95701-06012-07	BOLT,FLANGE 6x12	4	
7	94100-TBG-A00	WASHER 6mm	4	
8	93500-05012-0H	Phillips screw 5X12	2	
9	94050-05080	FLANGE NUT M5	2	
10	93903-25220	TAPPING SCREW 5X12	13	

Battery

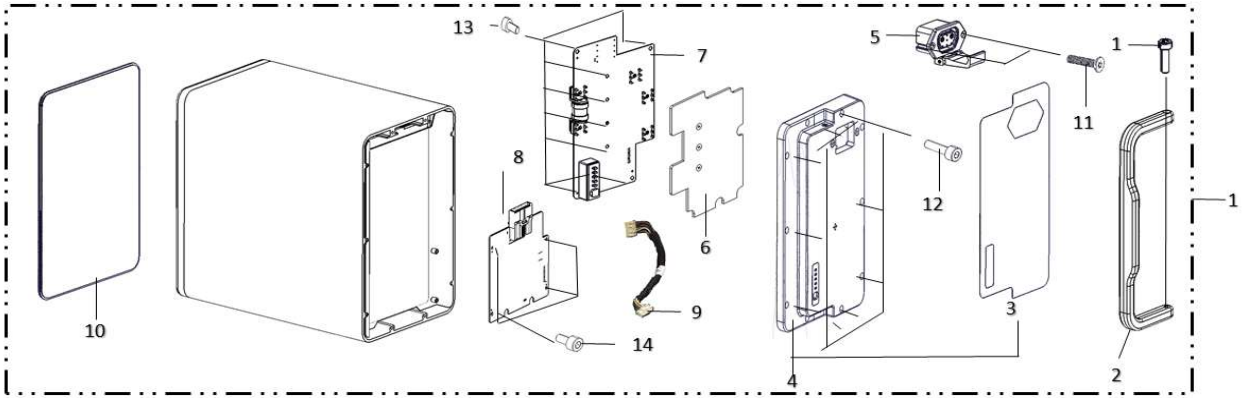

No.	Item No.	Name-EN	Qty	Remark
1	31500-TBG-A00-M1	Battery Assy(60V 45Ah)	1	
2	31512-TBG-A00-M1	Battery handle	1	
3	31500-TBG-A00-S1	Battery maintenance label	1	
4	31511-TBG-A00-M1	Battery upper cover	1	
5	31514-TBG-A00	Battery charging-discharging socket	1	
6	31533-TBG-A00-M1	Cooling Panel,BMS	1	
7	31530-TBG-A00-M1	Battery BMS power board(60V45Ah)A	1	
8	31531-TBG-A00-M1	Battery BMS control board(60V45Ah)B	1	
9	31532-TBG-A00-M1	Connector Wire,BMS A-B circuit board	1	
10	31518-TBG-A00	Rubber,Battery Bottom Shell	1	
11	31519-QSM-F00	Inner Torx countersunk head screws 4x18	2	
12	96700-04014-07	Hexagon socket bolt 4X14	10	
13	96700-04008-07	Hexagon socket bolt 4X8	8	
14	96700-03006-07	Hexagon socket bolt 3X6	4	
15	96700-05020-07	Hexagon socket bolt 5X20	2	

Motor

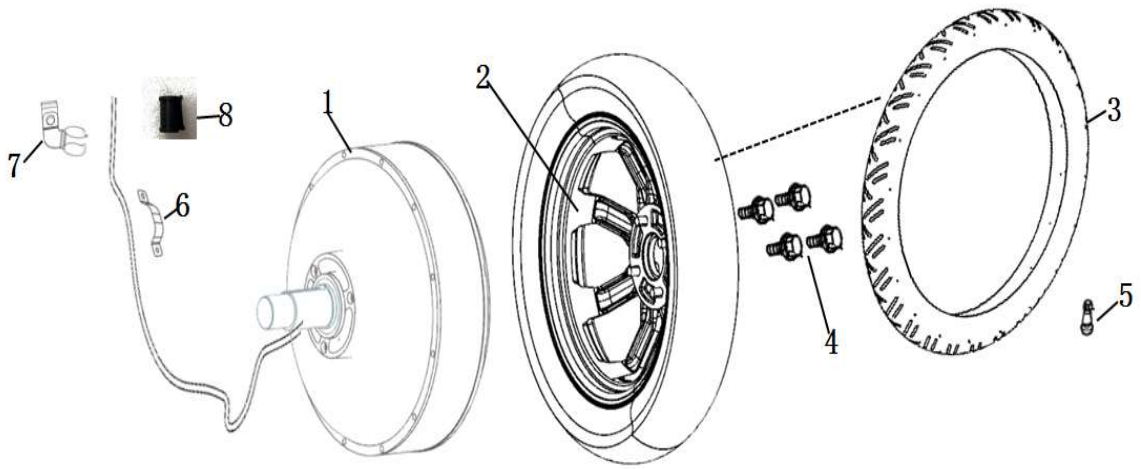

No.	Item No.	Name-EN	Qty	Remark
1	31100-TBG-C10	Motor Assy(3000W), L1e Version(25&45km/h)	1	
	31100-TBG-C00	Motor Assy(4000W), L3e Version(90km/h)	1	
2	42800-TBG-A00	Wheel Assy,Rr	1	
3	42701-TBG-A00	Tire(110/80-14 Tl)	1	
4	97701-TBG-A00	Bolt,Wheel	4	
5	44702-TAC-A00	Valve,Rim	1	
6	50159-TBG-A00	Battery wire clamp	1	
7	50158-TBG-A00	Motor wire clamp	1	
8	50160-TBG-A00	Clamp rubber	2	

Swingarm

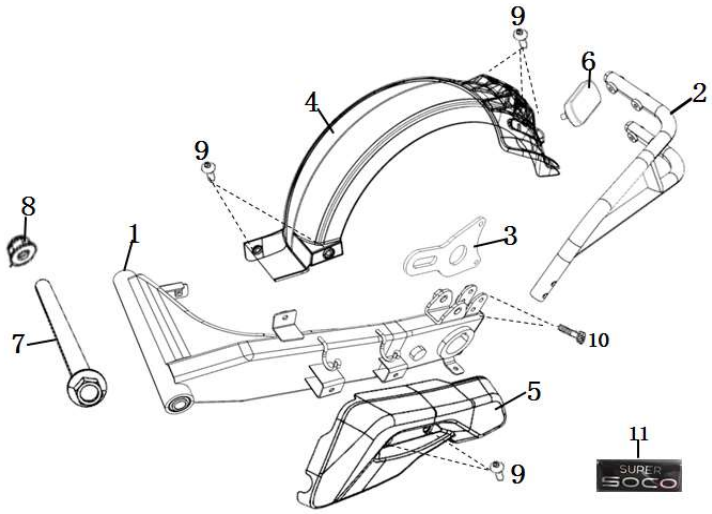

No.	Item No.	Name-EN	Qty	Remark
1	52100-TBG-A00	Swingarm Assy,Rr	1	
2	52150-TBG-A00	Stay Comp,Rr Fender	1	
3	43111-TBG-A00	Bracket,Rr Brake	1	
4	80100-TBG-A00	Fender,Rr	1	
5	80104-TBG-A00	Cover,Swingarm	1	
6	33741-QSM-C01	Reflector,Rr	1	
7	52101-TBG-A00	Bolt,Swingarm Pivot	1	
8	90307-QSM-A00	Nut,Special Flange M12	1	
9	95101-TBG-A00	Hexagon Socket Head Step Screw M6	7	
10	95701-TBG-A00	Flange Bolt 6X30	2	
11	88511-TBG-C00	Rear fork cover sticker	1	

Taillight

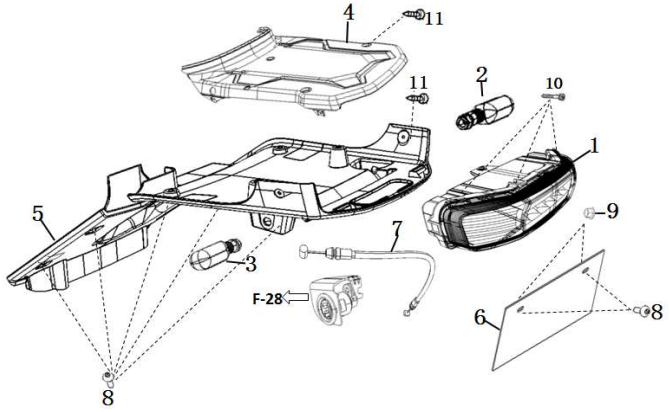

No.	Item No.	Name-EN	Qty	Remark
1	33700-TBG-A00	Light Assy,Tail	1	
2	33400-TBG-A10	Winker,R Rr	1	
3	33450-TBG-A10	Winker,L Rr	1	
4	83700-TBG-A00	Cover,Rr Center	1	
5	50503-TBG-A00	Cover,Rr Under	1	
6	80200-TAC-A00	Plate,Ad.	1	
7	77240-TBG-A00	Cable,Cushion Lock	1	
8	93500-QSM-C00	Cross recessed pan head screw 5X12	10	
9	94050-05080	FLANGE NUT M5	2	
10	91509-GE2-7605	FLANGE STEP SCREW 5X11.5	3	
11	93903-QSM-A10	Tapping Screw 4X12	8	

Controller(L1e)

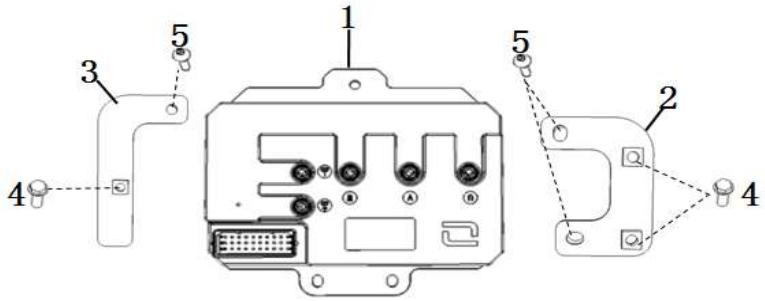

No.	Item No.	Name-EN	Qty	Remark
1	30100-TBG-C10-00	Controller(3000W 25KM/H), L1e 25KM/H Version	1	
	30100-TBG-C10-R10	Controller(3000W 45KM/H), L1e 45KM/H Version	1	
2	50431-TBG-C100	Adapter Plate Right,Controller	1	
3	50432-TBG-C100	Adapter Plate Left,Controller	1	
4	95701-06030-18	BOLT,FLANGE 6x30	3	
5	93500-06016-0G	Phillips screw 6X16	3	

Controller(L3e)

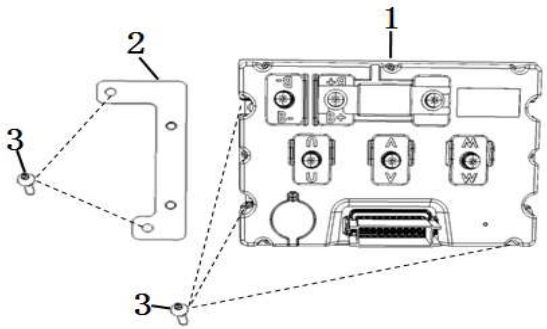

No.	Item No.	Name-EN	Qty	Remark
1	30100-TBG-C00-R20	Controller(4000W No Ltd), L3e Version	1	
2	50431-TBG-A00	Adapter Plate,Controller	1	
3	93500-06016-0G	Phillips screw 6X16	5	

Electrical Parts

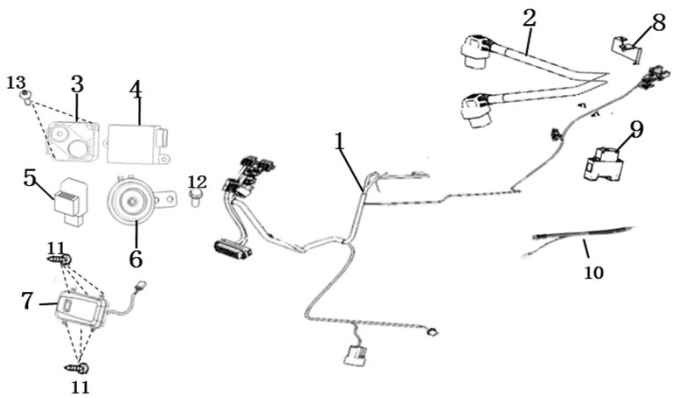

No.	Item No.	Name-EN	Qty	Remark
1	32100-TBG-A00	Main Harness Wire, L3e Version	1	
	32100-TBG-C10	Main Harness Wire, L1e Version	1	
2	32200-TBG-A00	Sub Harness Wire	1	
3	35020-TGC-A00-K	Alarm Assy.	1	
4	32300-TAC-A00	Dc-Dc	1	
5	38300-QSM-AF0	Relay,Winker	1	
6	38110-TAC-A00	Horn Assy	1	
7	30200-TBG-A00-NULL	Ecu Assy(Excl. APP Module)	1	
	30200-TBG-A00-4GEU	Ecu Assy(Incl. 4G Module)	1	
8	77232-TAC-A00	Electronic Cushion Lock	1	
9	35050-QSM-FA0	Circuit Protector	1	
10	32120-TBG-A00	Air switch connection wire	1	
11	93903-QSM-A000	Tapping Screw 4X12	6	
12	95701-06012-08	BOLT,FLANGE 6x12	1	
13	93500-06012-0H	Phillips screw 6X12	2	

Lock

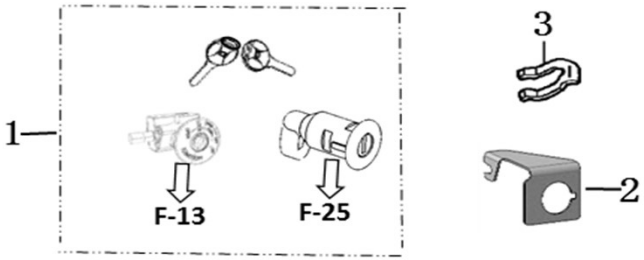

No.	Item No.	Name-EN	Qty	Remark
1	77220-TBG-A00	Lockset ,Vehicle	1	
2	77236-TBG-A00	Bracket,Seat Cushion Lock Cable	1	
3	75582-QSM-A00	Mounting spring leaf,Lock	1	

Charger

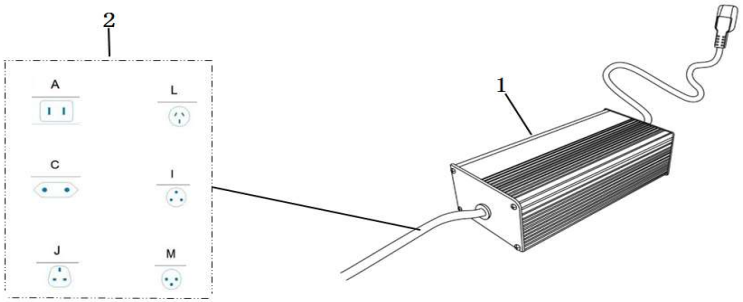

No.	Item No.	Name-EN	Qty	Remark
1	35300-TBG-A00	Charger(60V15A, CE)	1	
	35300-TBG-A20	Charger(60V8A, FCC), Canada	1	
	35300-TBG-A10	Charger(60V4A, PSE), Japan	1	
2	35320-QSM-A50-T1	Charging Cable(Chinese standard tripod)	1	
	35320-QSM-A50-T2	Charging Cable(European standard)	1	
	35320-QSM-A50-T3	Charging Cable(British Standard)	1	
	35320-QSM-A50-T4	Charging Cable(Australian Standard)	1	
	35320-QSM-A50-T5	Charging Cable(India)	1	
	35320-QSM-A50-T6	Charging Cable(Israel)	1	
	35320-QSM-A50-T7	Charging Cable(Switzerland)	1	
	35320-QSM-A50-T8	Charging Cable(Italy)	1	
	35320-QSM-A50-T9	Charging Cable(Argentina)	1	
	35320-QSM-A50-T10	Charging Cable(American Standard)	1	
	35320-QSM-A50-T11	Charging Cable(Brazil standard)	1	
	35320-QSM-A50-T12	Charging Cable(Japanese standard)	1	
	35320-QSM-A50-T13	Charging Cable(Chinese standard two feet)	1	

Sticker - Silver

No.	Item No.	Name-EN	Qty	Remark
1	64300-TBG-C00-S1-ST002	Strip 1,Fr Cover, ST002/Dark Silver Sticker	1	
2	64300-TBG-C00-S2-ST001	Strip 2,Fr Cover, ST001/Silver Sticker	1	
3	61100-TBG-C00-S1-ST001	Strip,Fr Fender, ST001/Silver Sticker	1	
4	64350-TBG-C00-S1-ST002	Strip,Fr R Side Cover, ST002/Dark Silver Sticker	1	
5	64355-TBG-C00-S1-ST002	Strip,Fr L Side Cover, ST002/Dark Silver Sticker	1	
6	83500-TBG-C00-S1-ST002	Strip,R Body Cover, ST002/Dark Silver Sticker	1	
7	83600-TBG-C00-S1-ST002	Strip,L Body Cover, ST002/Dark Silver Sticker	1	

Sticker - Black

No.	Item No.	Name-EN	Qty	Remark
1	64300-TBG-C00-S1-ST008	Strip 1,Fr Cover, ST008/Red Sticker	1	
2	64300-TBG-C00-S2-ST001	Strip 2,Fr Cover, ST001/Silver Sticker	1	
3	61100-TBG-C00-S1-ST008	Strip,Fr Fender, ST008/Red Sticker	1	
4	64350-TBG-C00-S1-ST008	Strip,Fr R Side Cover, ST008/Red Sticker	1	
5	64355-TBG-C00-S1-ST008	Strip,Fr L Side Cover, ST008/Red Sticker	1	
6	83500-TBG-C00-S1-ST008	Strip,R Body Cover, ST008/Red Sticker	1	
7	83600-TBG-C00-S1-ST008	Strip,L Body Cover, ST008/Red Sticker	1	

Sticker - Nardo Grey

No.	Item No.	Name-EN	Qty	Remark
1	64300-TBG-C00-S1-ST015	Strip 1,Fr Cover, ST015/Yellow Sticker	1	
2	64300-TBG-C00-S2-ST001	Strip 2,Fr Cover, , ST001/Silver Sticker	1	
3	61100-TBG-C00-S1-ST015	Strip,Fr Fender, ST015/Yellow Sticker	1	
4	64350-TBG-C00-S1-ST015	Strip,Fr R Side Cover, ST015/Yellow Sticker	1	
5	64355-TBG-C00-S1-ST015	Strip,Fr L Side Cover, ST015/Yellow Sticker	1	
6	83500-TBG-C00-S1-ST015	Strip,R Body Cover, ST015/Yellow Sticker	1	
7	83600-TBG-C00-S1-ST015	Strip,L Body Cover, ST015/Yellow Sticker	1	

Label

No.	Item No.	Name-EN	Qty	Remark
1	50100-TBG-C00-S1	Left Sticker, Frame	1	
2	50100-TBG-C00-S2	Right Sticker, Frame	1	
3	87505-TBG-C00-EU	Tire pressure label	1	
4	87560-QSM-A50	Driving warning label	1	
5	87503-TBG-A00-EU	Battery usage label	1	
6	89130-TBG-C00	CPX User Manual	1	
7	87506-QSM-C50	VMOTO label	1	
8	87507-QSM-A00	High voltage warning label	1	